Surge protection for Local Operating Networks (LONs)

Medium	Transceiver	Transmission	Network expansion	Node ➡ Node	Node supply
Two-wire	TP/XF-78	78 kbit/s	1400 m bus / line		Separately
Two-wire	TP/XF-1250	1250 kbit/s	130 m bus / line		Separately
Two-wire	**FTT10-A**	78 kbit/s	2700 m bus / line 500 m open structure	J-Y(ST)Y 2x2x0.8 320 m open structure	Separately
Two-wire	**LPT-10**	78 kbit/s	2200 m bus / line 500 m open structure	J-Y(ST)Y 2x2x0.8 320 m open structure	Via bus cable

Table 9.20.1 Transceivers (most common transceivers are printed in bold) with their transmission rates and maximum network expansion

The LonWorks technology allows to implement distributed automation systems. In this context, intelligent nodes communicate via the LonTalkProtocol®. The neuron chip (3120, 3150 and various enhancements), which accesses a transmission medium via a transceiver and features an I/O circuit for connecting, for example switches, relays, analogue outputs, analogue value measurement systems, is the core of a node (**Figure 9.20.1**).

Transmission media

In addition to the two-wire connection described below, 230 V, optical fibre cable, coaxial cable, LAN and radio transmission is possible.

Two-wire bus cable used as transmission medium

The transceivers for a two-wire bus cable (e.g. J-Y(ST)Y 2x2x0.8) have different transmission rates (kbit/s) and a different maximum network expansion (cable length in metres) (**Table 9.20.1**).

Since the two-wire bus cable can be placed in free space, the devices in the LON building installation are mainly equipped with FFTs (Free Topology Transceivers) and LPT (Link Power Transceivers) (LPTs are compatible with FTTs at the same bus).

The transceivers in FTT / LPT networks have the core / core and core / earth capacitances shown in **Table 9.20.2**. If surge protective devices are installed, their capacitances (core / core and core / earth) must also be considered since the maximum number of transceivers to be used is reduced accordingly (**Table 9.20.3**).

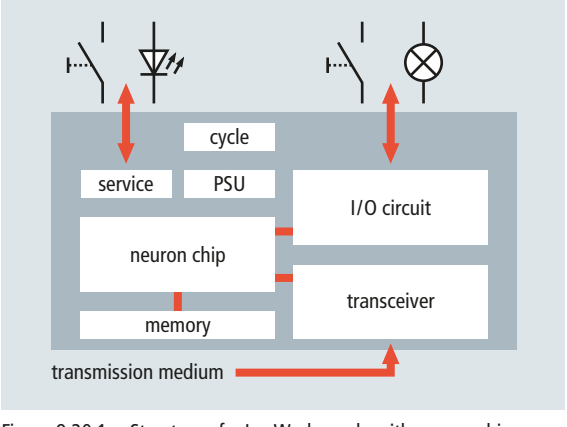

Figure 9.20.1 Structure of a LonWorks node with neuron chip, transceiver and I/O circuit

Surges caused by induction loops

When routing the cables, it must be observed that no induction loops are formed. Therefore, the bus and low-voltage cables leading to the bus devices must be routed in close

Transceiver	Capacitance	
	Core / core	Core / earth
FTT10-A	300 pF	10 max. 20 pF
LPT-10	150 pF	10 pF

Table 9.20.2 Capacitances of transceivers in FTT / LPT networks

Surge protective device	Capacitance	
	Core / core	Core / earth
BXT ML2 BD S 48	700 pF	25 pF

Table 9.20.3 Capacitances of surge protective devices

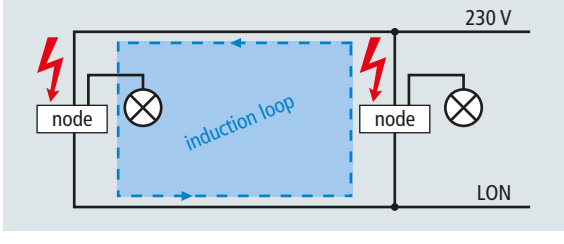

Figure 9.20.2 Induction loop caused by two nodes

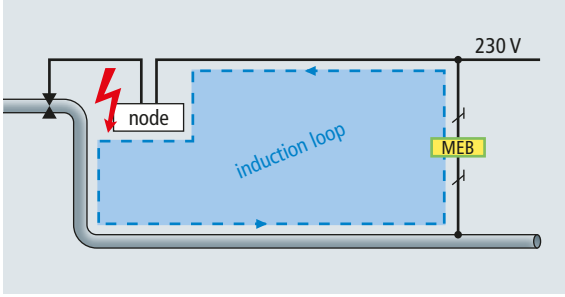

Figure 9.20.3 Induction loop caused by a magnetic valve attached to a metallic pipe

proximity to one another (**Figure 9.20.2**). If a J-Y(ST)Y cable has a dielectric strength of 2.5 kV, this cable can be connected in parallel with a low-voltage cable. However, a distance of 10 mm must be kept after removing the J-Y(ST)Y cable sheath. Loops are also formed if a node is attached to a metallic construction / pipe which is connected to the main earthing busbar (**Figure 9.20.3**). Also in this case, it is advisable to route the cables as close as possible to the construction / pipe.

Surge protection in case of a combination topology

If the inputs / outputs connected to the node are located in close proximity to the node, surge protective devices are not required.

Figure 9.20.4 shows surge protective devices for LPTs which are supplied by means of a two-wire bus cable. **Figure 9.20.5** shows surge protective devices for directly supplied FTTs (typically 24 V d.c.) in case of long connecting cables of power supply units.

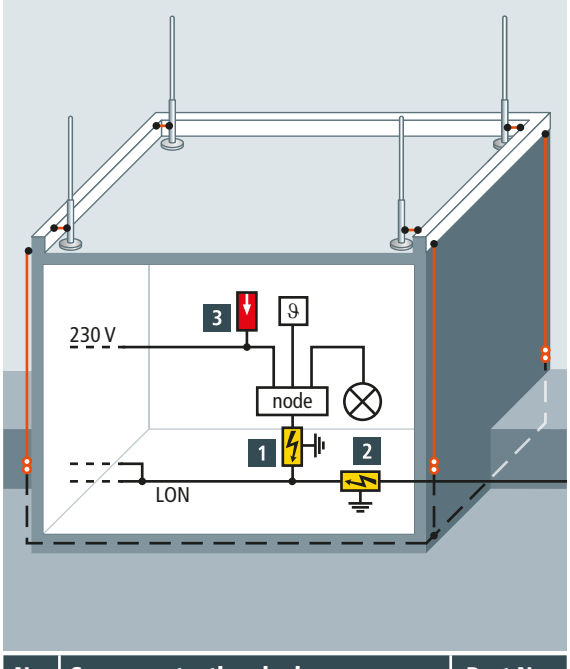

No.	Surge protective device	Part No.
1	BXT ML2 BD S 48 + BXT BAS	920 245 920 300
2	see 1 (lightning equipotential bonding)	
3	DR M 2P 255	953 200

Figure 9.20.4 Surge protective devices for an LPT in a combination topology extending beyond buildings

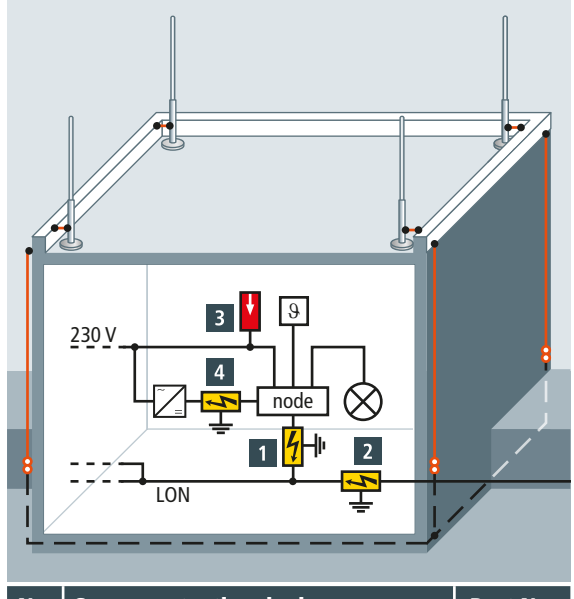

No.	Surge protective device	Part No.
1	BXT ML2 BD S 48 + BXT BAS	920 245 920 300
2	see 1 (lightning equipotential bonding)	
3	DR M 2P 255	953 200
4	BXT ML2 BE S 24 + BXT BAS	920 224 920 300

Figure 9.20.5 Surge protective devices for an FTT in a combination topology extending beyond buildings